Batten light | 1203mm | 40W | IP20 | 3-CCT

ARTICLE NUMBER: 136-301

View this product in our webshop



24.11.2026 - Disclaimer: information subject to change.

Solid LED surface-mount fixtures with adjustable colour temperature. Ideal replacements for fluorescent lights in corridors, stairwells, and storage areas. Quick to install and suitable for through-wiring.

Key product features:

- **Suitable for surface mounting:** Yes
- **Colour temperature (K):** 3000 – 5700
- **Length (mm):** 1203
- **Width (mm):** 71
- **Max. system power (W):** 40
- **Type of wiring:** Suitable for through-wiring

Technical specifications:

Product Name	Batten light | 1203mm | 40W | IP20 | 3-CCT
Ean	8714984933163
Outer box qty	12st
Dimmable	No
Connection type	Push-in clamp
Lamp type	LED not exchangeable
Housing colour	White
Material	Plastic
Length	120cm
Length	1203mm
Width	71mm
Height/depth	64mm
With movement sensor	No
With presence detector	No
With light sensor	No

24.11.2026 - Disclaimer: information subject to change.

Colour of light	White
Colour temperature	3000 - 4000 - 5700K
Colour rendering index CRI	80-89
Colour of light adjustable	Positions
Luminous flux adjustable	No
Beam angle adjustable	No
Voltage type	AC
Nominal voltage	230 - 240V
Nominal current	167 - 167mA
Number of poles	3
Light distributor	Diffuser lens/optic/panel
Connectable conductor cross section	0.75 - 2.5mm??
Type of control gear	LED operating device current-controlled
Exchangeable control gear	Yes
With control gear	Yes
Degree of protection (IP)	IP20
Impact strength	IK08
Rated lifetime L70/B50 at 25 ??C	50000h
Max. system power	40W
Rated luminous flux according to IEC 62722-2- 1	5200 - 5200lm
Luminaire efficacy	130lm/W
Power factor	0.92
Type of wiring	Suitable for loop-through wiring
Suitable for emergency lighting	No
Emergency power supply system	None
Emergency function monitoring system	None

24.11.2026 - Disclaimer: information subject to change.

Warranty	5 years





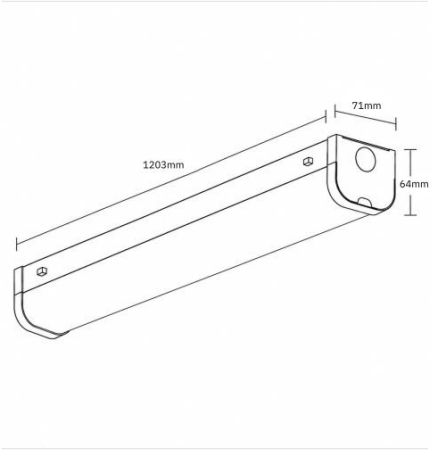

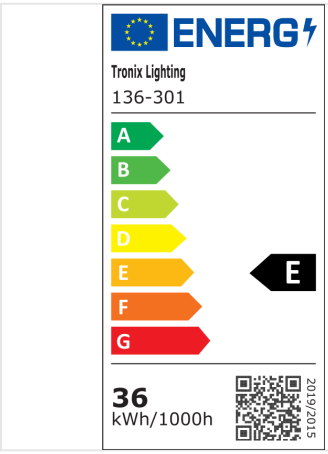

24.11.2026 - Disclaimer: information subject to change.