C13 cover opal / satined 200cm for profile PN4/PN5/PN6/PN7

ARTICLE NUMBER: 8600020

View this product in our webshop



25.11.2026 - Disclaimer: information subject to change.

This opal cover has a standard length of 200 cm and is suitable for various profiles. The profile is made of polycarbonate with a light transmission of 65%. This allows you to enjoy an even light distribution, while also providing a thight and clean finish.

Features

- Shatterproof and flame retardant (UL94 V-2) polycarbonate
- Suitable for profiles PN4, PN5, PN6 and PN7

Technical specifications:

Product Name	C13 cover opal / satined 200cm for profile PN4/PN5/PN6/PN7
Ean	8714984929838
Outer box qty	1st
Colour	White
Type	Cover
Material	Plastic
Length	2000mm
Length	2 metres
Width	26.79mm
Height	17.22mm
Warranty	5 years

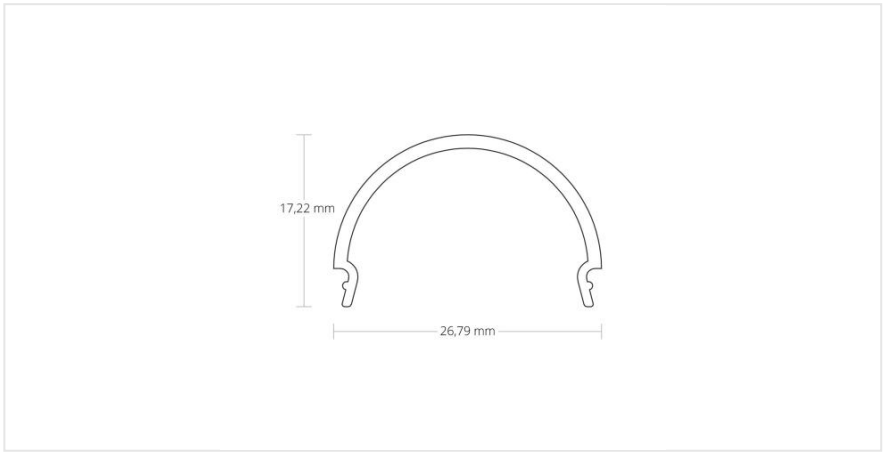
17,22 mm
26,79 mm