C26n cover opal / satined 200 cm for profile PN20

ARTICLE NUMBER: 8600111

View this product in our webshop



24.11.2026 - Disclaimer: information subject to change.

This opal cover has a standard length of 200 cm and is suitable for various profiles. The profile is made of polycarbonate with a light transmission of 65%. This allows you to enjoy an even light distribution, while also providing a thight and clean finish.

Features

- Shatterproof and flame retardant (UL94 V-2) polycarbonate
- Suitable for profile PN20

Technical specifications:

Product Name	C26n cover opal / satined 200 cm for profile PN20
Ean	8714984939349
Outer box qty	1st
Colour	White
Type	Cover
Material	Plastic
Length	2000mm
Length	2 metres
Width	23mm
Height	3.93mm
Warranty	5 years

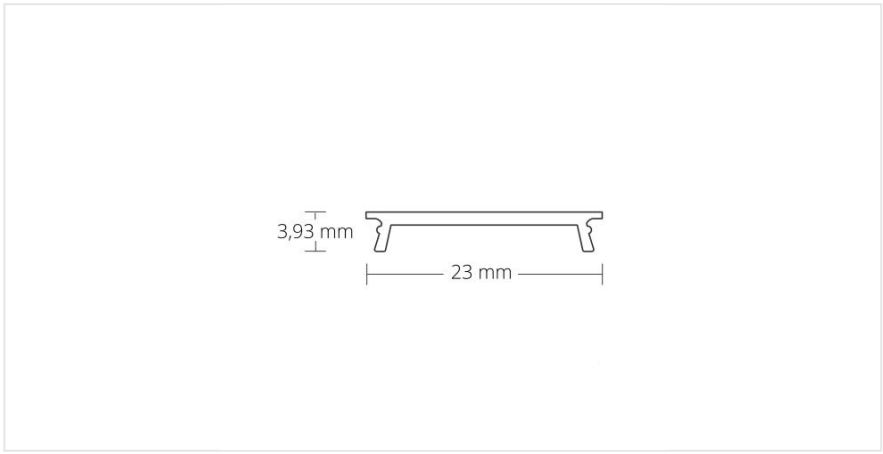
3,93 mm
23 mm