TRONIX guided by light

Ceiling light || Ø283mm | 5/10W | IP44 | 3000/4000K | sensor

ARTICLE NUMBER: 136-222

View this product in our webshop

24.11.2026 - Disclaimer: information subject to change.

This ceiling light (Ø 283 mm) features 2-CCT (3000K/4000K), switchable wattage (5W/10W), and a high-frequency motion sensor. The opal cover ensures uniform light distribution, while the IK10 rating guarantees maximum Impact strength.

Key product features:

- **Colour temperature (K):** 3000 - 4000
- **Material cover:** Plastic, opal
- **Outer diameter (mm):** 283
- **With movement sensor:** Yes
- **Impact strength:** IK10
- **Max. system power (W):** 10
- **Movement sensor technology:** High frequency

Technical specifications:

Product Name	Ceiling light || Ø283mm | 5/10W | IP44 | 3000/4000K | sensor
Ean	8714984948594
Outer box qty	10st
Lamp type	LED not exchangeable
Housing material	Plastic
Housing colour	White
Material cover	Plastic, opal
Suitable for emergency lighting	No
Nominal current	190 - 190mA
Voltage type	AC
Type of control gear	LED operating device current-controlled
With control gear	Yes
Outer diameter	283mm
Constant light output (CLO)	No
Type of grid	Matt

24.11.2026 - Disclaimer: information subject to change.

Nominal voltage	220 - 240V
Height/depth	90mm
Colour of light	White
Colour rendering index CRI	80-89
Exchangeable control gear	No
Dimming 0-10 V	No
Dimming 1-10 V	No
Dimming DALI	No
Dimming phase cut-off (trailing edge)	No
With movement sensor	Yes
With presence detector	No
Impact strength	IK10
With light sensor	No
Suitable for surface mounting	Yes
Suitable for built-in mounting	No
Light distribution	Symmetric
Beam angle	> 80° - Extreme wide beam
Light outlet	Direct
Dimming RF	No
Dimming Zigbee	No
Light distributor	Other
Surface protection housing	Lacquered
Colour consistency (McAdam ellipse)	SDCM6
Rated lifetime L70/B50 at 25 °C	50000h
Colour of light adjustable	Positions
Luminous flux adjustable	No
Max. system power	10W

24.11.2026 - Disclaimer: information subject to change.

Beam angle adjustable	No
Power factor	0.9
Type of wiring	Ending
Number of poles	3
Compatible with Casambi	No
Luminaire efficacy	110 - 110lm/W
Dimmable	No
Rated luminous flux according to IEC 62722-2- 1	550 - 1100lm
Emergency power supply system	None
Suitable for ceiling mounting	Yes
Connectable conductor cross section	0.75 - 0.75mm²
Suitable for wall mounting	Yes
Suitable for suspended mounting	No
Movement sensor/presence detector technology	High frequency
Suitable for workplace according to EN 12464-1	No
Degree of protection (IP), front side	IP44
With mounting material	Yes
Colour temperature	3000 - 4000K
With connection cord and plug	No
Warranty	3 years
Ambient temperature	-25 - 40°C

24.11.2026 - Disclaimer: information subject to change.





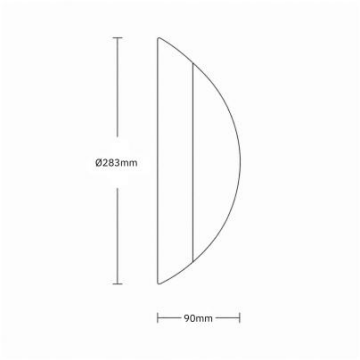

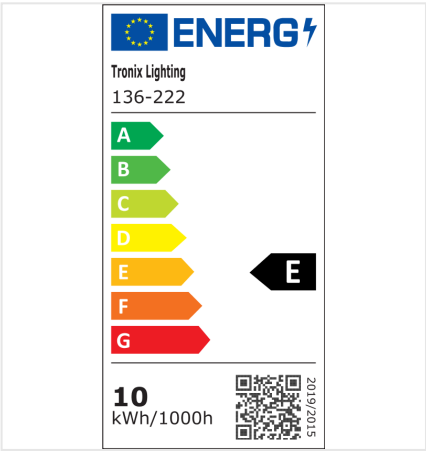

24.11.2026 - Disclaimer: information subject to change.