TRONIX guided by light

Downlight 3-CCT | cut out Ø135-145mm | 18W

ARTICLE NUMBER: 136-125

View this product in our webshop



23.11.2026 - Disclaimer: information subject to change.

This 3-CCT downlight provides glare-free lighting with a low viewing angle and UGR rating. Features a 3-CCT switch (3000K, 4000K, 6000K). Comes with a driver and plug for fast installation.

Key product features:

- **Max. system power (W):** 18
- **Colour temperature (K):** 3000 - 6000
- **Housing colour:** White
- **Outer diameter (mm):** 165
- **Light distributor:** Diffuser lens/optic/panel
- **Built-in diameter (mm):** 135 - 145
- **Connection type:** Plug

Technical specifications:

Product Name	Downlight 3-CCT | cut out Ø135-145mm | 18W
Ean	8714984923010
Outer box qty	20st
Lamp type	LED not exchangeable
Lamp holder	None
Housing colour	White
Housing material	Aluminium
Material cover	Plastic matt/satinized
Connection type	EU plug
Height/depth	63mm
Outer diameter	165mm
Built-in length	- - -mm
Built-in width	- - -mm
Built-in height	63 - -mm
Built-in diameter	135 - 145mm

23.11.2026 - Disclaimer: information subject to change.

Suitable for built-in mounting	Yes
Suitable for surface mounting	No
Suitable for pedestal/floor mounting	No
Suitable for wall mounting	No
Suitable for ceiling mounting	Yes
Suitable for light-track mounting	No
Suitable for clamp-mounting	Yes
With movement sensor	No
With presence detector	No
With light sensor	No
Colour of light	White
Colour consistency (McAdam ellipse)	SDCM6
Colour of light adjustable	Positions
Reflector colour	White
Colour temperature	3000 - 4000 - 6000K
Colour rendering index CRI	80-89
Luminous flux adjustable	No
Light outlet	Direct
Beam angle	> 80° - Extreme wide beam
Beam angle adjustable	No
Voltage type	AC
Nominal voltage	220 - 240V
Nominal current	75 - 75mA
Number of poles	2
Light distributor	Diffuser lens/optic/panel
Light distribution	Symmetric
Connectable conductor cross section	0.75 - 2.5mm²

23.11.2026 - Disclaimer: information subject to change.

Type of control gear	LED operating device current-controlled
Exchangeable control gear	No
With control gear	Yes
Degree of protection (IP), front side	IP44
Degree of protection (IP), rear side	IP20
Surface protection	Lacquered
Impact strength	IK02
Rated lifetime L70/B50 at 25 °C	50000h
Max. system power	18W
Rated luminous flux according to IEC 62722-2- 1	1980 - 1980lm
Luminaire efficacy	110 - 110lm/W
Power factor	0.94
Suitable for lamp power	0 - 0W
Dimming method	Non-dimmable
Surface brushed	No
Type of wiring	Ending
Emergency power supply system	None
Emergency function monitoring system	None
Adjustability	not adjustable
Reflector	None
Warranty	5 years
Ambient temperature	-20 - 40°C
UGR level (Unified Glare Rating)	= 28

23.11.2026 - Disclaimer: information subject to change.







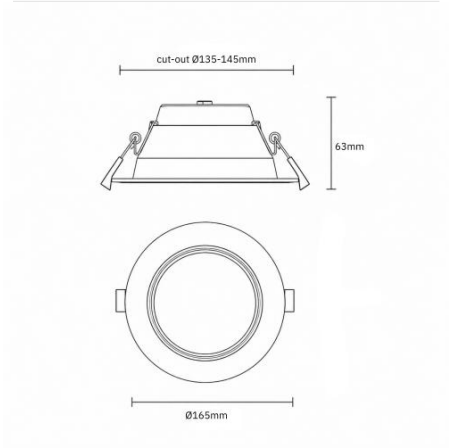

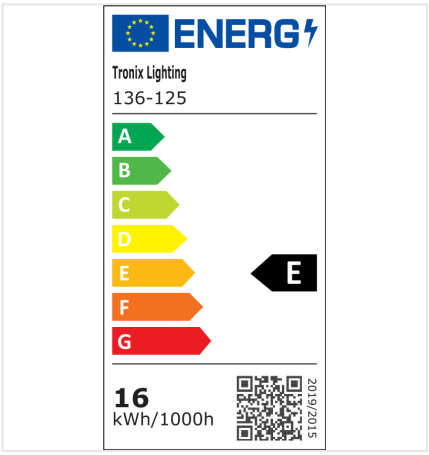

23.11.2026 - Disclaimer: information subject to change.