Downlight flat | white | 120mm | 7W | 3-CCT | dimmable

ARTICLE NUMBER: 136-180

View this product in our webshop

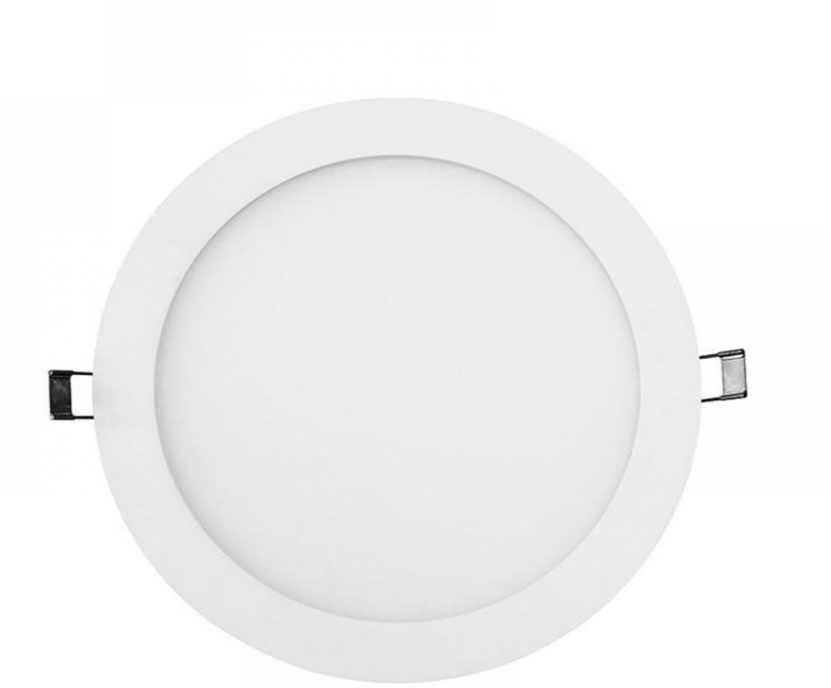

24.11.2026 - Disclaimer: information subject to change.

This flat designed Downlight with a external trailing edge dimmable driver has a pre-settable color temperature option. The three color temperatures 3000K, 4000K and 5700K can easily be pre-set with a DIP switch. Because of this functionality, this Downlight is very widely applicable. Think of spaces such as offices, retail spaces, facility areas, hotels or schools.

Features

- Including trailing edge dimmable driver.
- Directly connectable by using a euro plug.
- Pre-settable by a CCT switch in the color temperatures 3000K, 4000K and 5700K.
- Long service life of 40.000 hours

Technical specifications:

Product Name	Downlight flat | white | 120mm | 7W | 3-CCT | dimmable
Ean	8714984933361
Outer box qty	10st
Lamp type	LED not exchangeable
Lamp holder	None
Housing colour	White
Housing material	Aluminium
Material cover	Plastic matt/satinized
Connection type	EU plug
Height/depth	21mm
Outer diameter	120mm
Built-in length	- - -mm
Built-in width	- - -mm
Built-in height	21 - -mm
Built-in diameter	105 - 115mm

24.11.2026 - Disclaimer: information subject to change.

Suitable for built-in mounting	Yes
Suitable for surface mounting	No
Suitable for pedestal/floor mounting	No
Suitable for wall mounting	No
Suitable for ceiling mounting	Yes
Suitable for light-track mounting	No
Suitable for clamp-mounting	Yes
With movement sensor	No
With presence detector	No
With light sensor	No
Colour of light	White
Colour consistency (McAdam ellipse)	SDCM6
Colour of light adjustable	Positions
Reflector colour	White
Colour temperature	3000 - 4000 - 5700K
Colour rendering index CRI	80-89
Luminous flux adjustable	Continuously variable
Light outlet	Direct
Beam angle	> 80° - Extreme wide beam
Beam angle adjustable	No
Voltage type	AC
Nominal voltage	220 - 240V
Nominal current	150 - 150mA
Number of poles	2
Light distributor	Diffuser lens/optic/panel
Light distribution	Symmetric
Connectable conductor cross section	0.75 - 2.5mm²

24.11.2026 - Disclaimer: information subject to change.

Type of control gear	LED operating device current-controlled
Exchangeable control gear	No
With control gear	Yes
Degree of protection (IP), front side	IP44
Degree of protection (IP), rear side	IP20
Surface protection	Lacquered
Impact strength	IK02
Rated lifetime L70/B50 at 25 °C	40000h
Max. system power	7W
Rated luminous flux according to IEC 62722-2- 1	420 - 525lm
Luminaire efficacy	60 - 75lm/W
Power factor	0.9
Suitable for lamp power	0 - 0W
Dimming method	Trailing edge dimming
Surface brushed	No
Type of wiring	Ending
Emergency power supply system	None
Emergency function monitoring system	None
Adjustability	not adjustable
Reflector	None
Warranty	5 years
Ambient temperature	-20 - 40°C





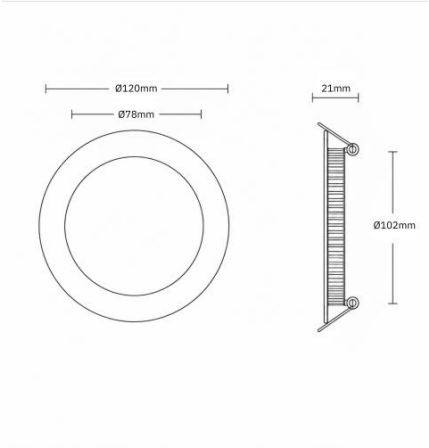

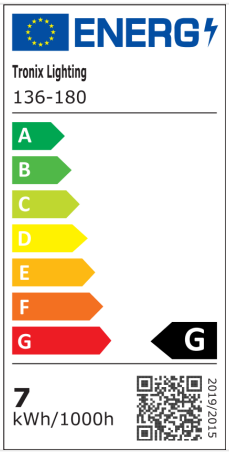

24.11.2026 - Disclaimer: information subject to change.