# Downlight flat || white | 173mm | 10W | 3-CCT | dimmable

ARTICLE NUMBER: 136-181

View this product in our webshop

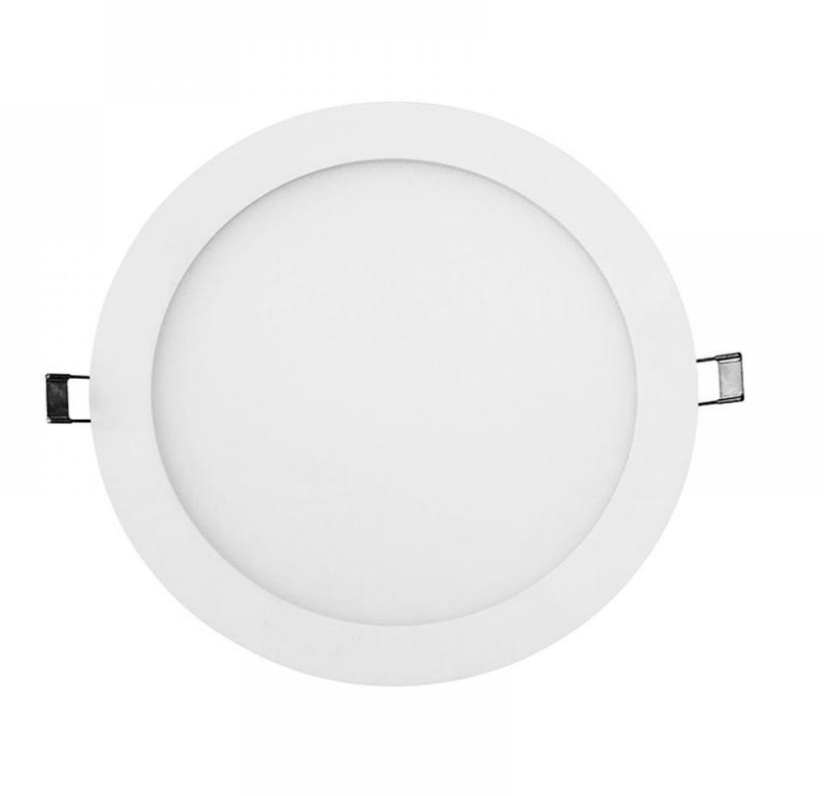

25.11.2026 - Disclaimer: information subject to change.

**LAST STOCK!**

This flat designed Downlight with a external trailing edge dimmable driver has a pre-settable color temperature option. The three color temperatures 3000K, 4000K and 5700K can easily be pre-set with a DIP switch. Because of this functionality, this Downlight is very widely applicable. Think of spaces such as offices, retail spaces, facility areas, hotels or schools.

### Features

- Including trailing edge dimmable driver.
- Directly connectable by using a euro plug.
- Pre-settable by a CCT switch in the color temperatures 3000K, 4000K and 5700K.
- Long service life of 40.000 hours

### Technical specifications:

| | |
|---|---|
| Product Name | Downlight flat \|\| white \| 173mm \| 10W \| 3-CCT \| dimmable |
| Ean | 8714984933378 |
| Outer box qty | 10st |
| Lamp type | LED not exchangeable |
| Lamp holder | None |
| Housing colour | White |
| Housing material | Aluminium |
| Material cover | Plastic matt/satinized |
| Connection type | EU plug |
| Height/depth | 21mm |
| Outer diameter | 173mm |
| Built-in length | - - -mm |
| Built-in width | - - -mm |

25.11.2026 - Disclaimer: information subject to change.

| | |
|---|---|
| Built-in height | 21 - -mm |
| Built-in diameter | 160 - 168mm |
| Suitable for built-in mounting | Yes |
| Suitable for surface mounting | No |
| Suitable for pedestal/floor mounting | No |
| Suitable for wall mounting | No |
| Suitable for ceiling mounting | Yes |
| Suitable for light-track mounting | No |
| Suitable for clamp-mounting | Yes |
| With movement sensor | No |
| With presence detector | No |
| With light sensor | No |
| Colour of light | White |
| Colour consistency (McAdam ellipse) | SDCM6 |
| Colour of light adjustable | Positions |
| Reflector colour | White |
| Colour temperature | 3000 - 4000 - 5700K |
| Colour rendering index CRI | 80-89 |
| Luminous flux adjustable | Continuously variable |
| Light outlet | Direct |
| Beam angle | > 80° - Extreme wide beam |
| Beam angle adjustable | No |
| Voltage type | AC |
| Nominal voltage | 220 - 240V |
| Nominal current | 250 - 250mA |
| Number of poles | 2 |
| Light distributor | Diffuser lens/optic/panel |

25.11.2026 - Disclaimer: information subject to change.

| | |
|---|---|
| Light distribution | Symmetric |
| Connectable conductor cross section | 0.75 - 2.5mm² |
| Type of control gear | LED operating device current-controlled |
| Exchangeable control gear | No |
| With control gear | Yes |
| Degree of protection (IP), front side | IP44 |
| Degree of protection (IP), rear side | IP20 |
| Surface protection | Lacquered |
| Impact strength | IK02 |
| Rated lifetime L70/B50 at 25 °C | 40000h |
| Max. system power | 10W |
| Rated luminous flux according to IEC 62722-2- 1 | 600 - 750lm |
| Luminaire efficacy | 60 - 75lm/W |
| Power factor | 0.9 |
| Suitable for lamp power | 0 - 0W |
| Dimming method | Trailing edge dimming |
| Surface brushed | No |
| Type of wiring | Ending |
| Emergency power supply system | None |
| Emergency function monitoring system | None |
| Adjustability | not adjustable |
| Reflector | None |
| Warranty | 5 years |
| Ambient temperature | -20 - 40°C |

25.11.2026 - Disclaimer: information subject to change.





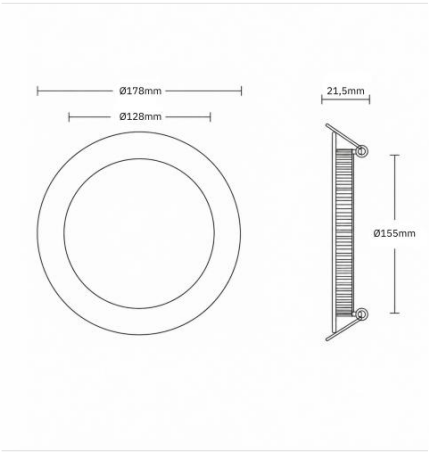


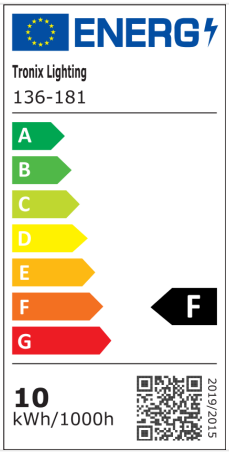


25.11.2026 - Disclaimer: information subject to change.