TRONIX guided by light

# Downlight | Ø108mm | black | 5-CCT | 7~11W | GST18i3

ARTICLE NUMBER: 136-525

View this product in our webshop



23.11.2026 - Disclaimer: information subject to change.

5 colour temperatures, 5 wattages, 5 sizes. This versatile downlight combines adaptability, performance and reliability in one compact solution. Features an IP44 front, low glare (UGR<19) and 5-year warranty.

**Key product features**

- **Max. system power (W):** 11
- **Colour temperature (K):** 2700 – 3000 – 3500 – 4000 – 5700
- **Housing colour:** Black
- **Outer diameter (mm):** 108
- **Luminous flux adjustable:** fixed steps
- **Built-in diameter (mm):** 90 - 98
- **Connection type:** Plug-in connector for plug-in building installation

**Technical specifications:**

| | |
|---|---|
| Product Name | Downlight \| Ø108mm \| black \| 5-CCT \| 7~11W \| GST18i3 |
| Ean | 8714984951648 |
| Outer box qty | 40st |
| Lamp type | LED not exchangeable |
| Lamp holder | None |
| Housing colour | Black |
| Housing material | Aluminium |
| Material cover | Plastic, opal |
| Connection type | GST18i3 |
| Height/depth | 76mm |
| Outer diameter | 108mm |
| Built-in length | - - -mm |
| Built-in width | - - -mm |
| Built-in height | 76 - -mm |
| Built-in diameter | 90 - 98mm |

23.11.2026 - Disclaimer: information subject to change.

| | |
|---|---|
| Suitable for built-in mounting | Yes |
| Suitable for surface mounting | No |
| Suitable for pedestal/floor mounting | No |
| Suitable for wall mounting | No |
| Suitable for ceiling mounting | No |
| Suitable for light-track mounting | No |
| Suitable for clamp-mounting | Yes |
| With movement sensor | No |
| With presence detector | No |
| With light sensor | No |
| Colour of light | White |
| Colour consistency (McAdam ellipse) | SDCM3 |
| Colour of light adjustable | Positions |
| Reflector colour | Silver |
| Colour temperature | 2700 - 3000 - 3500 - 4000 - 5700K |
| Colour rendering index CRI | 90-100 |
| Luminous flux adjustable | Positions |
| Light outlet | Direct |
| Beam angle | 41-80° - Wide beam |
| Beam angle adjustable | No |
| Voltage type | AC |
| Nominal voltage | 220 - 240V |
| Nominal current | 29 - 47mA |
| Number of poles | 2 |
| Light source included | Yes, fixed LED |
| Light distributor | Reflector |
| Light distribution | Symmetric |

23.11.2026 - Disclaimer: information subject to change.

| | |
|---|---|
| Connectable conductor cross section | 0.5 - 2.5mm² |
| Type of control gear | LED operating device current-controlled |
| Exchangeable control gear | Yes |
| With control gear | Yes |
| Degree of protection (IP), front side | IP44 |
| Degree of protection (IP), rear side | IP20 |
| Surface protection | Powder coating |
| Impact strength | IK02 |
| Rated lifetime L70/B50 at 25 °C | 50000h |
| Max. system power | 11W |
| Rated luminous flux according to IEC 62722-2- 1 | 630 - 990lm |
| Luminaire efficacy | 90 - 90lm/W |
| Power factor | 0.96 |
| Suitable for lamp power | 0 - 0W |
| Dimming method | Non-dimmable |
| Surface brushed | No |
| Type of wiring | Ending |
| Emergency power supply system | None |
| Emergency function monitoring system | None |
| Adjustability | not adjustable |
| Reflector | High-gloss |
| Warranty | 5 years |
| Ambient temperature | -20 - 50°C |
| UGR level (Unified Glare Rating) | = 19 |



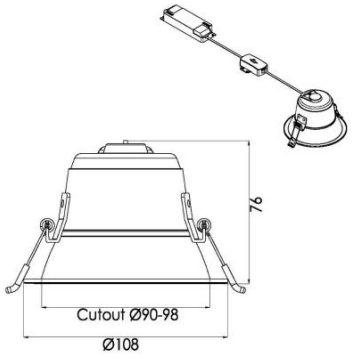


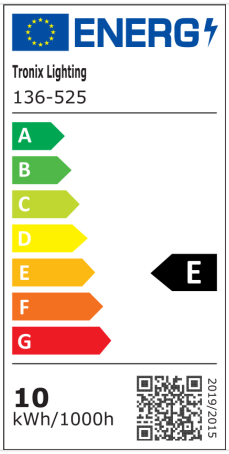


23.11.2026 - Disclaimer: information subject to change.