TRONIX guided by light

Downlight | Ø108mm | white | 5-CCT | 7~11W | GST18i3

ARTICLE NUMBER: 136-520

View this product in our webshop



23.11.2026 - Disclaimer: information subject to change.

5 colour temperatures, 5 wattages, 5 sizes. This versatile downlight combines adaptability, performance and reliability in one compact solution. Features an IP44 front, low glare (UGR<19) and 5-year warranty.

Key product features

- **Max. system power (W):** 11
- **Colour temperature (K):** 2700 – 3000 – 3500 – 4000 – 5700
- **Housing colour:** White
- **Outer diameter (mm):** 108
- **Luminous flux adjustable:** fixed steps
- **Built-in diameter (mm):** 90 - 98
- **Connection type:** Plug-in connector for plug-in building installation

Technical specifications:

Product Name	Downlight | Ø108mm | white | 5-CCT | 7~11W | GST18i3
Ean	8714984951594
Outer box qty	40st
Lamp type	LED not exchangeable
Lamp holder	None
Housing colour	White
Housing material	Aluminium
Material cover	Plastic, opal
Connection type	GST18i3
Height/depth	76mm
Outer diameter	108mm
Built-in length	- - -mm
Built-in width	- - -mm
Built-in height	76 - -mm
Built-in diameter	90 - 98mm

23.11.2026 - Disclaimer: information subject to change.

Suitable for built-in mounting	Yes
Suitable for surface mounting	No
Suitable for pedestal/floor mounting	No
Suitable for wall mounting	No
Suitable for ceiling mounting	No
Suitable for light-track mounting	No
Suitable for clamp-mounting	Yes
With movement sensor	No
With presence detector	No
With light sensor	No
Colour of light	White
Colour consistency (McAdam ellipse)	SDCM3
Colour of light adjustable	Positions
Reflector colour	Silver
Colour temperature	2700 - 3000 - 3500 - 4000 - 5700K
Colour rendering index CRI	90-100
Luminous flux adjustable	Positions
Light outlet	Direct
Beam angle	41-80° - Wide beam
Beam angle adjustable	No
Voltage type	AC
Nominal voltage	220 - 240V
Nominal current	29 - 47mA
Number of poles	2
Light source included	Yes, fixed LED
Light distributor	Reflector
Light distribution	Symmetric

23.11.2026 - Disclaimer: information subject to change.

Connectable conductor cross section	0.5 - 2.5mm²
Type of control gear	LED operating device current-controlled
Exchangeable control gear	Yes
With control gear	Yes
Degree of protection (IP), front side	IP44
Degree of protection (IP), rear side	IP20
Surface protection	Powder coating
Impact strength	IK02
Rated lifetime L70/B50 at 25 °C	50000h
Max. system power	11W
Rated luminous flux according to IEC 62722-2- 1	700 - 1100lm
Luminaire efficacy	100 - 100lm/W
Power factor	0.96
Suitable for lamp power	0 - 0W
Dimming method	Non-dimmable
Surface brushed	No
Type of wiring	Ending
Emergency power supply system	None
Emergency function monitoring system	None
Adjustability	not adjustable
Reflector	High-gloss
Warranty	5 years
Ambient temperature	-20 - 50°C
UGR level (Unified Glare Rating)	= 22

23.11.2026 - Disclaimer: information subject to change.



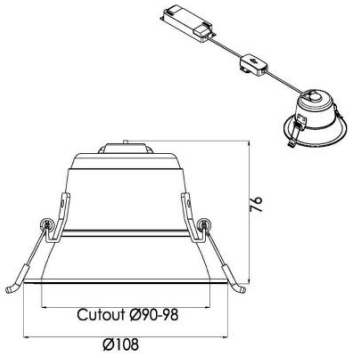

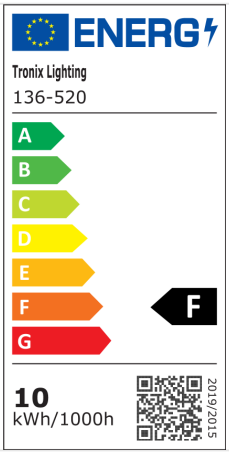

23.11.2026 - Disclaimer: information subject to change.