E201 end cap for profile FP1 with cable gland, 1pc

ARTICLE NUMBER: 81023002

View this product in our webshop

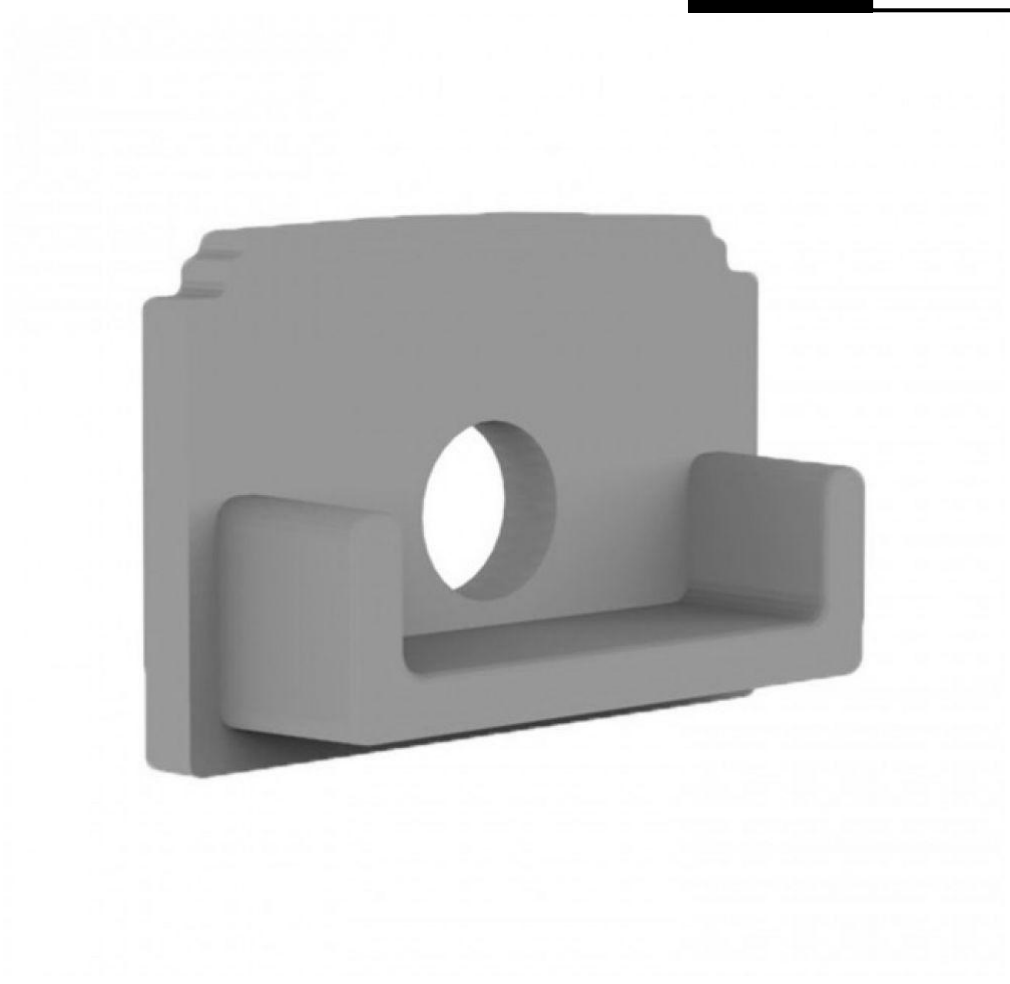

25.11.2026 - Disclaimer: information subject to change.

PVC endcap for profile FP1 with cable gland.

Technical specifications:

Product Name	E201 end cap for profile FP1 with cable gland, 1pc
Ean	8714984945098
Outer box qty	1st
Colour	Aluminium
Type	End cap
Material	Plastic
Length	14.9mm
Width	11mm
Height	2mm
Warranty	5 years