I-connector | black | for 3-phase rails

ARTICLE NUMBER: 169-044

View this product in our webshop



25.11.2026 - Disclaimer: information subject to change.

Connect multiple pieces of track rail using this I shape connector, available in black, white and silver.

Rails & accessories - 3 phase track

Tronix Lighting offers a wide and diverse range in terms of 3 phase tracks and matching accessories. Each product is available in matching colors for a beautiful, customized result.

Features

- Color: Black
- IP20 for indoor use

Technical specifications:

Product Name	I-connector | black | for 3-phase rails
Ean	8714984914278
Outer box qty	50st
Colour	Black
Type	Connector
Number of cores	5
Nominal cross section	2.5mm??
Warranty	5 years
Type of accessory/spare part	Coupler/connector straight

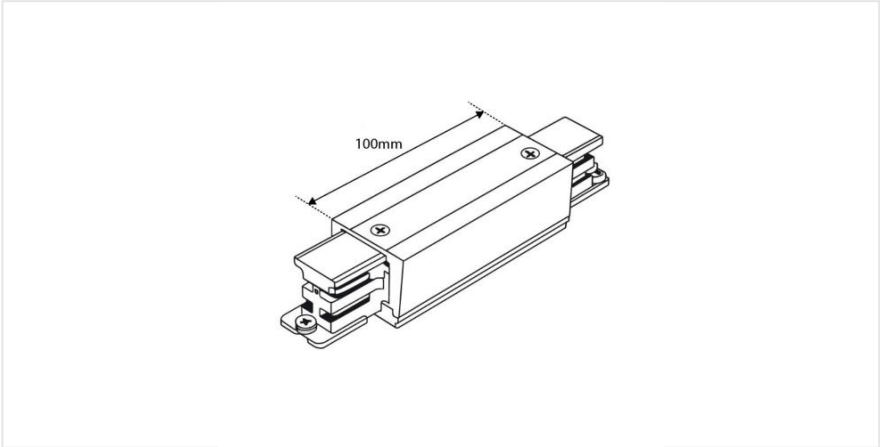
100mm