TRONIX guided by light

PL1 | black | installation set | incl. C1 and accessories

ARTICLE NUMBER: 8192285

View this product in our webshop



28.11.2026 - Disclaimer: information subject to change.

CARE SHARE CONNECT

tronixlighting.com

Complete LED installation set featuring a 200 cm Galaxy PL1 surface-mounted profile, opal C1 cover and installation accessories. Suitable for LED strips up to 12 mm wide.

Key Product Features

- **Type:** Surface-mounted Max.
- **LED strip width:** 12 mm
- **Colour:** Black

Technical specifications:

Product Name	PL1 | black | installation set | incl. C1 and accessories
Ean	8714984956414
Outer box qty	1st
Colour	Black
Type	Installation set
Material	Aluminium
Length	2000mm
Length	2 metres
Width	16.8mm
Height	5.91mm
Max. width LED strip	12mm
Warranty	5 years

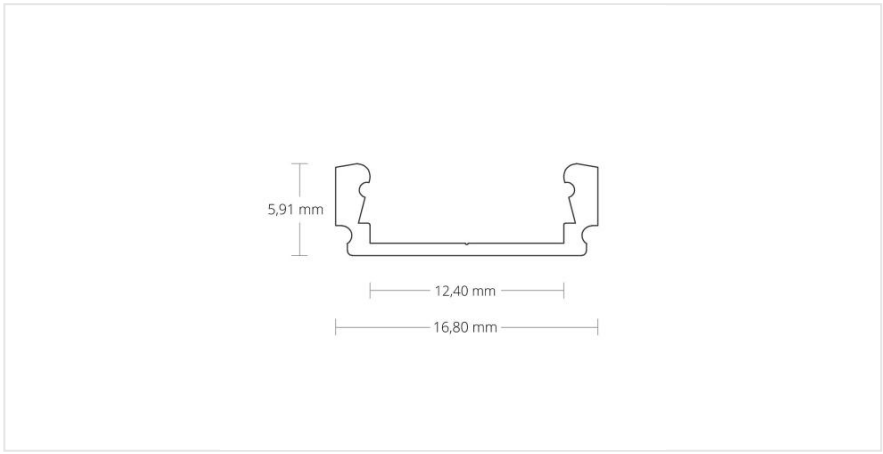
5,91 mm
12,40 mm
16,80 mm