PN17V2 LED profile 2m, black RAL9005, strips max. 30mm

ARTICLE NUMBER: 8123364

View this product in our webshop



23.11.2026 - Disclaimer: information subject to change.

The black PN17 V2 LED profile provides direct and indirect lighting. Suitable for LED strips up to 30 mm (direct) and 12 mm (indirect). Compatible with anti-glare and lens covers. Mounting via suspension wires or clips.

Technical specifications:

Product Name	PN17V2 LED profile 2m, black RAL9005, strips max. 30mm
Ean	8714984952737
Outer box qty	1st
Colour	Black
Type	Surface mounting profile
Material	Aluminium
Length	2000mm
Length	2 metres
Width	40mm
Height	50mm
Max. width LED strip	30mm
Warranty	5 years

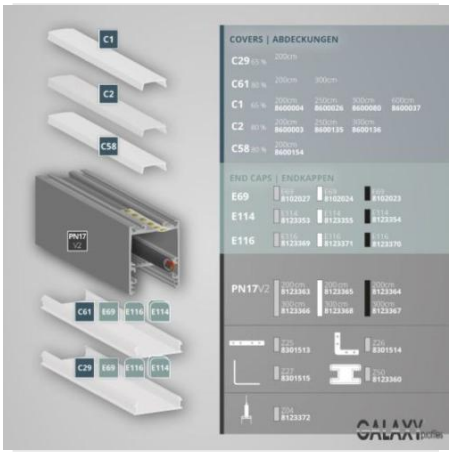

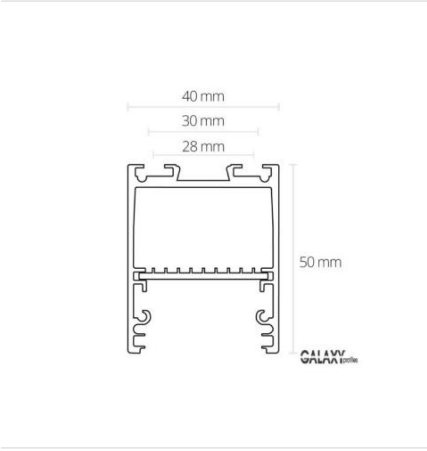



23.11.2026 - Disclaimer: information subject to change.