PN17V2 LED profile 2m, silver powder coated strips max 30mm

ARTICLE NUMBER: 8123363

View this product in our webshop



23.11.2026 - Disclaimer: information subject to change.

The silver-coloured PN17 V2 LED profile provides direct and indirect lighting. Suitable for LED strips up to 30 mm (direct) and 12 mm (indirect). Compatible with anti-glare and lens covers. Mounting via suspension wires or clips.

Technical specifications:

Product Name	PN17V2 LED profile 2m, silver powder coated strips max 30mm
Ean	8714984952713
Outer box qty	1st
Colour	Aluminium
Type	Surface mounting profile
Material	Aluminium
Length	2000mm
Length	2 metres
Width	40mm
Height	50mm
Max. width LED strip	30mm
Warranty	5 years

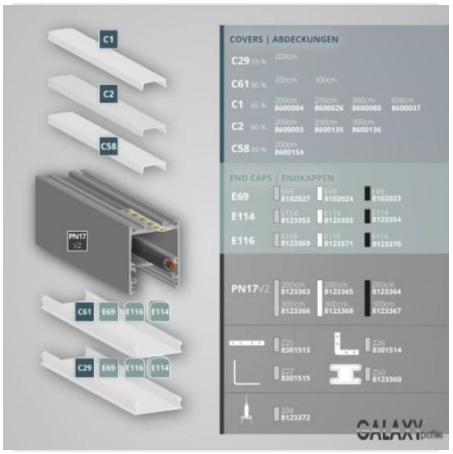

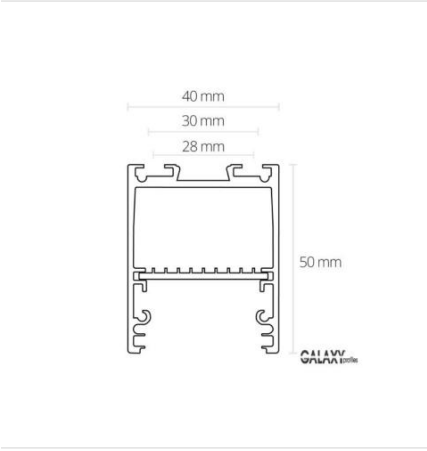



23.11.2026 - Disclaimer: information subject to change.