Power supply | 24V | 75W | block type indoor

ARTICLE NUMBER: 215-403

View this product in our webshop



23.11.2026 - Disclaimer: information subject to change.

This sturdy LED driver has a maximum output of 75W and 24V and is extremely well suited for use with various light sources. In addition, the compact size makes the driver easy to place.

Features

- Output power 3125 mA
- Compact size 184*61*32 mm

Technical specifications:

Product Name	Power supply | 24V | 75W | block type indoor
Ean	8714984919570
Outer box qty	50st
Housing	Plastic housing
Model	Static
Output voltage	24 - 24V
Output current	3125 - 3125mA
Suitable for outdoor use	No
Suitable for DC-voltage (primary side)	No
Output power	0 - 75W
Degree of protection (IP)	IP20
Length	184mm
Width	61mm
Height	32mm
Power consumption	75W
Input voltage	- - -V
Frequency input voltage	- - -Hz
Overload protection	Yes
Overtemperature protection	Yes
Control method	Non-dimmable

23.11.2026 - Disclaimer: information subject to change.

Short-circuit protected	Yes
Ambient temperature	- - -??C
DIN-rail mounting	No
Brand	Tronix Lighting
Dimmable	No
Emergency power supply system	None
Control type	Constant voltage
Warranty	5 years
Suitable for DIN rail (top hat rail) mounting	No
Interface Pulse Width Modulation (PWM)	No

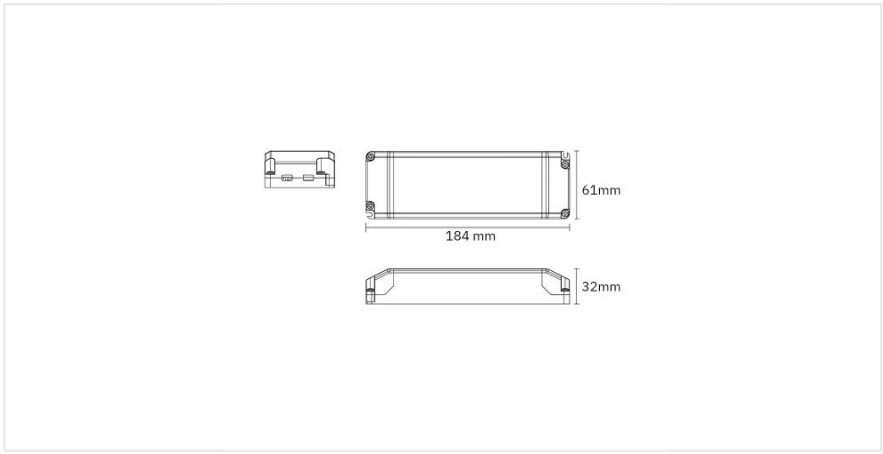
61mm
184 mm
32mm