TRONIX guided by light

Spot | black | cut out Ø90-95mm | 9W | 2700K | dim

ARTICLE NUMBER: 136-191

View this product in our webshop



23.11.2026 - Disclaimer: information subject to change.

This downlight is an efficient replacement for GU10 spotlights. The deep housing and high-quality reflector minimize glare and allow for subtle placement in the ceiling. The internal driver allows quick, easy installation.

Key product features:

- **Max. system power (W)**: 9
- **Colour temperature (K)**: 2700
- **Housing colour**: Black
- **Beam angle:** 21-40° - Medium beam
- **Outer diameter (mm):** 103
- **Built-in diameter (mm)**: 90 - 95
- **Dimmable:** Yes

Technical specifications:

Product Name	Spot | black | cut out Ø90-95mm | 9W | 2700K | dim
Ean	8714984941830
Outer box qty	60st
Lamp type	LED not exchangeable
Lamp holder	None
Housing colour	Black
Housing material	Aluminium
Material cover	Plastic, transparent
Connection type	Stripped wire
Height/depth	90.7mm
Outer diameter	103mm
Built-in length	- - -mm
Built-in width	- - -mm
Built-in height	90.7 - -mm
Built-in diameter	90 - 95mm

23.11.2026 - Disclaimer: information subject to change.

Suitable for built-in mounting	Yes
Suitable for surface mounting	No
Suitable for pedestal/floor mounting	No
Suitable for wall mounting	No
Suitable for ceiling mounting	Yes
Suitable for light-track mounting	No
Suitable for clamp-mounting	Yes
With movement sensor	No
With presence detector	No
With light sensor	No
Colour of light	White
Colour consistency (McAdam ellipse)	SDCM3
Colour of light adjustable	No
Reflector colour	Black
Colour temperature	2700K
Colour rendering index CRI	80-89
Luminous flux adjustable	Continuously variable
Light outlet	Direct
Beam angle	21-40° - Medium beam
Beam angle adjustable	No
Voltage type	AC
Nominal voltage	220 - 240V
Nominal current	43 - 43mA
Number of poles	2
Light distributor	Reflector
Light distribution	Symmetric
Connectable conductor cross section	0.75 - 2.5mm²

23.11.2026 - Disclaimer: information subject to change.

Type of control gear	LED operating device current-controlled
Exchangeable control gear	No
With control gear	Yes
Degree of protection (IP), front side	IP44
Degree of protection (IP), rear side	IP20
Surface protection	Powder coating
Impact strength	IK02
Rated lifetime L70/B50 at 25 °C	30000h
Max. system power	9W
Rated luminous flux according to IEC 62722-2- 1	540 - 540lm
Luminaire efficacy	60 - 60lm/W
Power factor	0.91
Suitable for lamp power	0 - 0W
Dimming method	Trailing edge dimming
Surface brushed	No
Type of wiring	Ending
Emergency power supply system	None
Emergency function monitoring system	None
Adjustability	not adjustable
Reflector	High-gloss
Warranty	3 years
Ambient temperature	-20 - 40°C
UGR level (Unified Glare Rating)	= 22

23.11.2026 - Disclaimer: information subject to change.







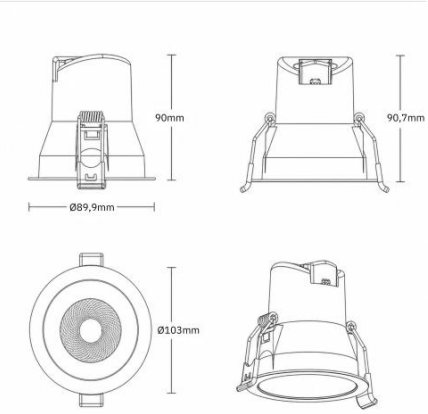

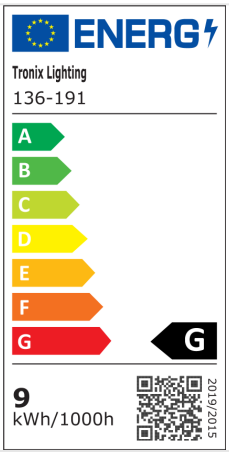

23.11.2026 - Disclaimer: information subject to change.