TL T8 || 1,5m | 25W | 130Lm/W | 965 color | e-ballast & 230V

ARTICLE NUMBER: 177-102

View this product in our webshop



25.11.2026 - Disclaimer: information subject to change.

These E-Ballast LED tubes can be directly exchanged 1 to 1 with a fluorescent tube in a traditional luminaire with electronic ballast. In addition, in traditional or LED luminaires, they can be directly connected to 230V (remove ballast).

Features

- Rotating end caps for easy install the tube
- Retrofit
- Very high luminous efficiency >150 Lm/W
- Professional design that prevents shadows or light spots
- E-ballast compatible, or directly 230V
- Mainly used in factories, supermarkets, parking areas, hospitals and schools.

Technical specifications:

Product Name	TL T8 || 1,5m | 25W | 130Lm/W | 965 color | e-ballast & 230V
Ean	8714984931381
Dimmable	No
Colour	White
Housing colour	White
Material of light bulb	Plastic
Length	1498mm
Diameter	26mm
Lamp power	25 - 25W
Colour temperature	6500K
Colour rendering index CRI	80-89
Beam angle	140 - 140??
Voltage type	AC
Nominal voltage	100 - 240V
Nominal current	104 - 250mA

25.11.2026 - Disclaimer: information subject to change.

Lamp designation	T8
Filament lamp	No
Type of glass/cover	Opal
Socket	G13
Degree of protection (IP)	IP20
Average nominal lifetime	50000h
Rated luminous flux according to IEC 62612	3250lm
Lamp efficacy	130lm/W
Power factor	0.9
Warranty	5 years
Suitable for refrigerator	No

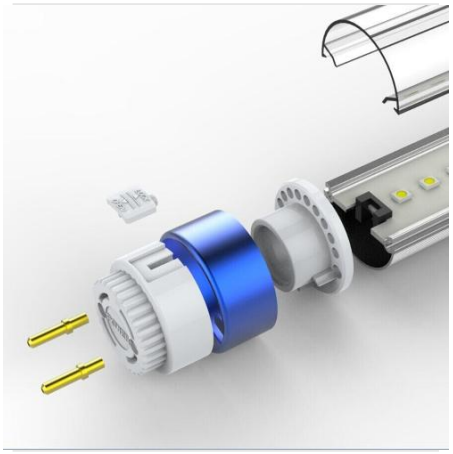

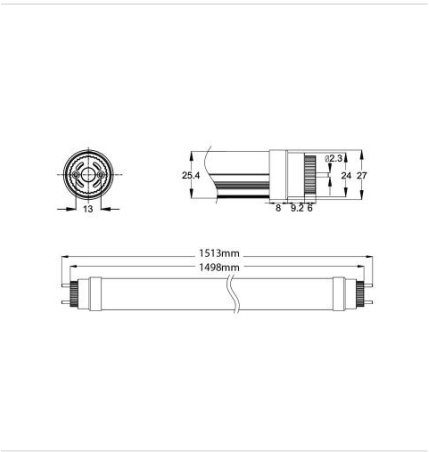

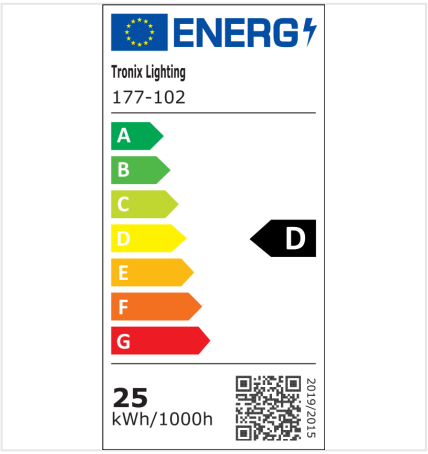

25.11.2026 - Disclaimer: information subject to change.