Track spot | 3-phase | black | 8W | 930-935-940 | 45° | dim.

ARTICLE NUMBER: 169-276

View this product in our webshop



24.11.2026 - Disclaimer: information subject to change.

The Driver of this dimmable Trackspot is located in the Trackadaptor, so the heat from both the LEDs and the Driver can be dissipated separately. This ensures good heat dissipation and a longer lifespan.

Rails & accessories - 3 phase track

Tronix Lighting offers a wide and diverse range in terms of 3 phase tracks and matching accessories. Each product is available in matching colors for a beautiful, customized result.

Features

- High heat dissipation through separate LEDs and Driver
- Dimmable

Technical specifications:

Product Name	Track spot | 3-phase | black | 8W | 930-935-940 | 45° | dim.
Ean	8714984948457
Outer box qty	20st
Lamp type	LED not exchangeable
Lamp holder	None
Housing colour	Black
Housing material	Plastic
Material cover	Plastic, transparent
Length	126mm
Outer diameter	60mm
Built-in length	- - -mm
Built-in width	- - -mm
Built-in height	- - -mm
Built-in diameter	0 - 0mm
Suitable for built-in mounting	No
Suitable for surface mounting	Yes

Suitable for pedestal/floor mounting	No
Colour	Black
Suitable for wall mounting	No
Suitable for ceiling mounting	Yes
Suitable for light-track mounting	Yes
Suitable for clamp-mounting	No
With movement sensor	No
With light sensor	No
Colour of light	White
Colour consistency (McAdam ellipse)	SDCM3
Colour of light adjustable	No
Reflector colour	Silver
Colour temperature	3000 - 3500 - 4000K
Colour rendering index CRI	90-100
Luminous flux adjustable	Continuously variable
Light outlet	Direct
Beam angle	41-80° - Wide beam
Beam angle adjustable	No
Voltage type	AC
Nominal voltage	220 - 240V
Nominal current	84 - 84mA
Number of poles	3
Light source included	Yes, fixed LED
Light distributor	Reflector
Light distribution	Symmetric
Connectable conductor cross section	0 - 0mm²
Type of control gear	LED operating device current-controlled

24.11.2026 - Disclaimer: information subject to change.

Exchangeable control gear	No
With control gear	Yes
Degree of protection (IP), rear side	IP20
Surface protection	Untreated
Impact strength	IK02
Rated lifetime L70/B50 at 25 °C	50000h
Max. system power	8W
Rated luminous flux according to IEC 62722-2- 1	600 - 600lm
Luminaire efficacy	75 - 75lm/W
Power factor	0.98
Suitable for lamp power	0 - 0W
Surface brushed	No
Type of wiring	Ending
Emergency power supply system	None
Emergency function monitoring system	None
Adjustability	Rotating and swivelling
Reflector	High-gloss
Warranty	5 years
Ambient temperature	-20 - 45°C
Input voltage tracklights	230V
UGR level (Unified Glare Rating)	= 25



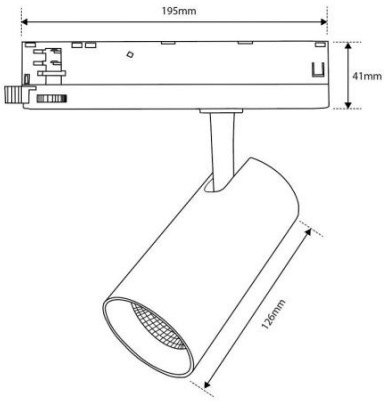

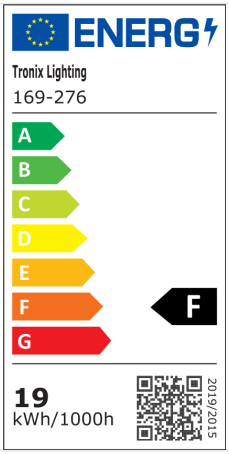

24.11.2026 - Disclaimer: information subject to change.