Track spot | 3-phase | white | 30W | 930-935-940 | 45° | dim

ARTICLE NUMBER: 169-363

View this product in our webshop



23.11.2026 - Disclaimer: information subject to change.

The Driver of this dimmable Trackspot is located in the Trackadaptor, so the heat from both the LEDs and the Driver can be dissipated separately. This ensures good heat dissipation and a longer lifespan.

Rails & accessories - 3 phase track

Tronix Lighting offers a wide and diverse range in terms of 3 phase tracks and matching accessories. Each product is available in matching colors for a beautiful, customized result.

Features

- High heat dissipation through separate LEDs and Driver
- Dimmable

Technical specifications:

Product Name	Track spot | 3-phase | white | 30W | 930-935-940 | 45° | dim
Ean	8714984947733
Outer box qty	12st
Lamp type	LED not exchangeable
Lamp holder	None
Housing colour	White
Housing material	Plastic
Material cover	Plastic, transparent
Length	210mm
Outer diameter	90mm
Built-in length	- - -mm
Built-in width	- - -mm
Built-in height	- - -mm
Built-in diameter	0 - 0mm
Suitable for built-in mounting	No
Suitable for surface mounting	Yes

Suitable for pedestal/floor mounting	No
Colour	White
Suitable for wall mounting	No
Suitable for ceiling mounting	Yes
Suitable for light-track mounting	Yes
Suitable for clamp-mounting	No
With movement sensor	No
With light sensor	No
Colour of light	White
Colour consistency (McAdam ellipse)	SDCM3
Colour of light adjustable	No
Reflector colour	Silver
Colour temperature	3000 - 3500 - 4000K
Colour rendering index CRI	90-100
Luminous flux adjustable	Continuously variable
Light outlet	Direct
Beam angle	21-40° - Medium beam
Beam angle adjustable	No
Voltage type	AC
Nominal voltage	220 - 240V
Nominal current	129 - 129mA
Number of poles	3
Light source included	Yes, fixed LED
Light distributor	Reflector
Light distribution	Symmetric
Connectable conductor cross section	0 - 0mm²
Type of control gear	LED operating device current-controlled

23.11.2026 - Disclaimer: information subject to change.

Exchangeable control gear	No
With control gear	Yes
Degree of protection (IP), rear side	IP20
Surface protection	Untreated
Impact strength	IK02
Rated lifetime L70/B50 at 25 °C	50000h
Max. system power	30W
Rated luminous flux according to IEC 62722-2- 1	2400 - 2400lm
Luminaire efficacy	80 - 80lm/W
Power factor	0.96
Suitable for lamp power	0 - 0W
Surface brushed	No
Type of wiring	Ending
Emergency power supply system	None
Emergency function monitoring system	None
Adjustability	Rotating and swivelling
Reflector	High-gloss
Warranty	5 years
Ambient temperature	-20 - 45°C
Input voltage tracklights	230V
UGR level (Unified Glare Rating)	= 22







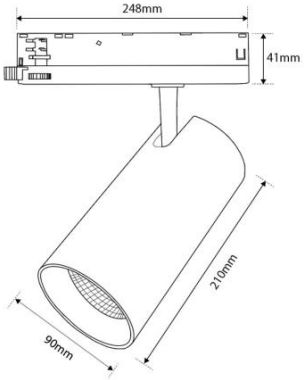

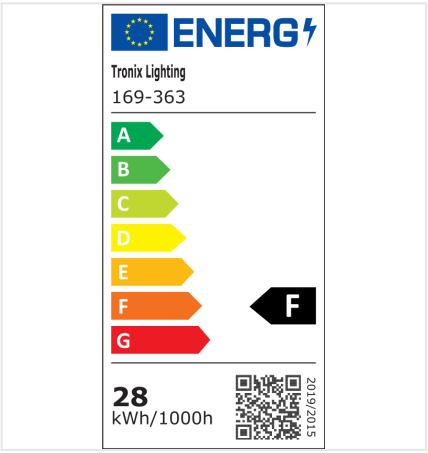

23.11.2026 - Disclaimer: information subject to change.