TRONIX guided by light

VA1 surface profile 200cm black RAL 9005

ARTICLE NUMBER: 8123152

View this product in our webshop



23.11.2026 - Disclaimer: information subject to change.

The VA1 LED profile has a standard length of 200 cm and is suitable for LED strips with a maximum width of 16 mm. The profile has a particularly slim design and can be easily mounted on a wall or the ceiling. In addition, it is also possible to use this profile as a hanging fixture in combination with a set of wire suspension.

Features

- Type: Surface
- Max. width LED strip: 16 mm

Technical specifications:

Product Name	VA1 surface profile 200cm black RAL 9005
Ean	8714984944022
Outer box qty	1st
Colour	Black
Type	Surface mounting profile
Material	Aluminium
Length	2000mm
Length	2 metres
Width	18.5mm
Height	23mm
Max. width LED strip	16mm
Warranty	5 years

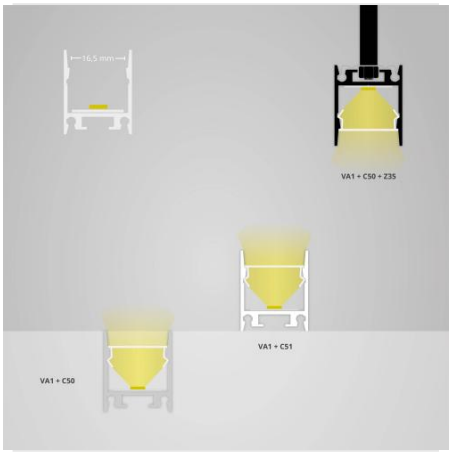

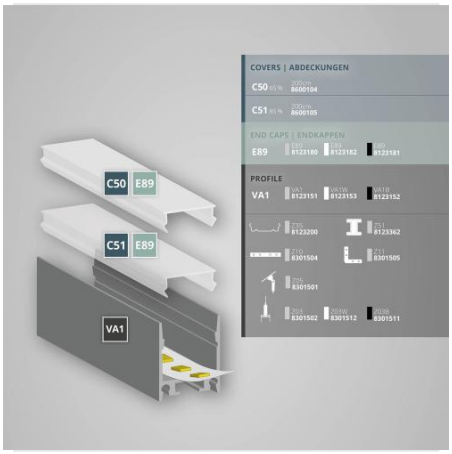

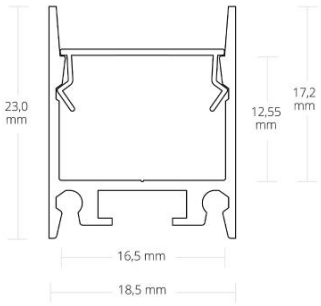

23.11.2026 - Disclaimer: information subject to change.