VA3 surface profile 200cm anodized

ARTICLE NUMBER: 8123157

View this product in our webshop

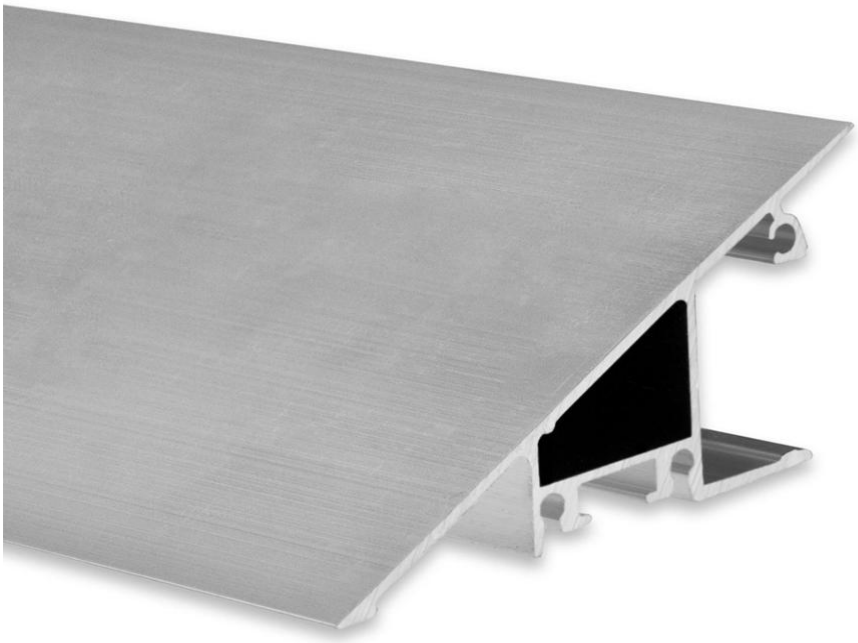

24.10.2026 - Disclaimer: information subject to change.

The VA3 LED profile has a standard length of 200 cm and is suitable for LED strips with a maximum width of 16 mm. The profile makes use of a triangular design, spreading light indirectly and glare-free. In addition, the design creates a profile that is not only practical, but also works as decoration.

Features

- Type: Surface
- Max. width LED strip: 16 mm

Technical specifications:

Product Name	VA3 surface profile 200cm anodized
Ean	8714984944077
Outer box qty	1st
Colour	Aluminium
Type	Surface mounting profile
Material	Aluminium
Length	2000mm
Length	2 metres
Width	27.4mm
Height	58.4mm
Max. width LED strip	16mm
Warranty	5 years

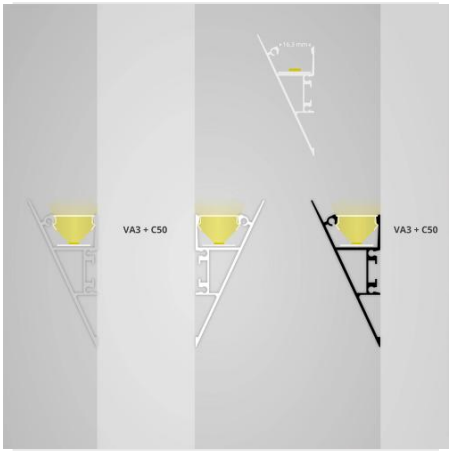

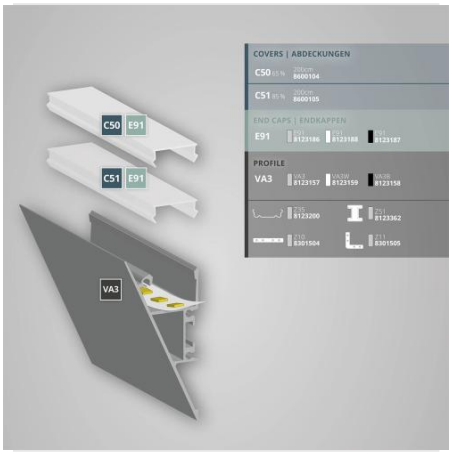

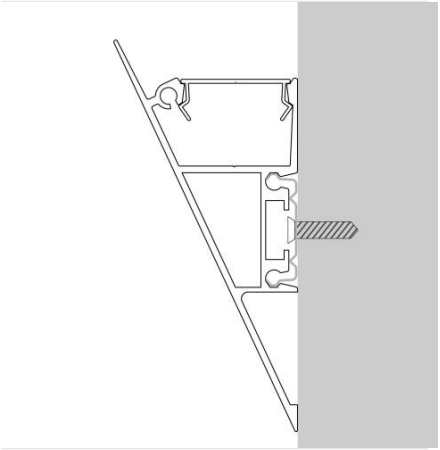

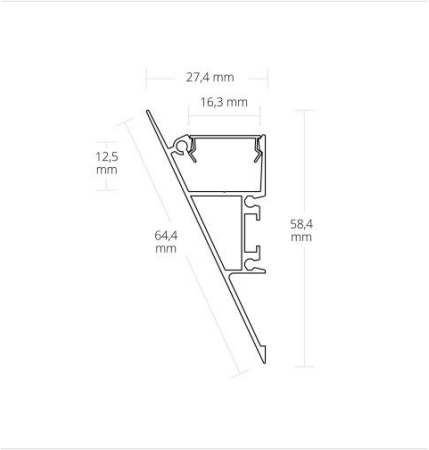

24.10.2026 - Disclaimer: information subject to change.