TRONIX guided by light

# X-connector | black | for 3-phase rails

ARTICLE NUMBER: 169-045

View this product in our webshop



25.11.2026 - Disclaimer: information subject to change.

Connect multiple pieces of track rail using this X shape connector, available in black, white and silver.

**Rails & accessories - 3 phase track**

Tronix Lighting offers a wide and diverse range in terms of 3 phase tracks and matching accessories. Each product is available in matching colors for a beautiful, customized result.

**Features**

- Color: Black
- IP20 for indoor use

**Technical specifications:**

| | |
|---|---|
| Product Name | X-connector \| black \| for 3-phase rails |
| Ean | 8714984914285 |
| Outer box qty | 10st |
| Colour | Black |
| Type | Connector |
| Number of cores | 5 |
| Nominal cross section | 2.5mm?? |
| Warranty | 5 years |
| Type of accessory/spare part | Coupler/connector X-shape |

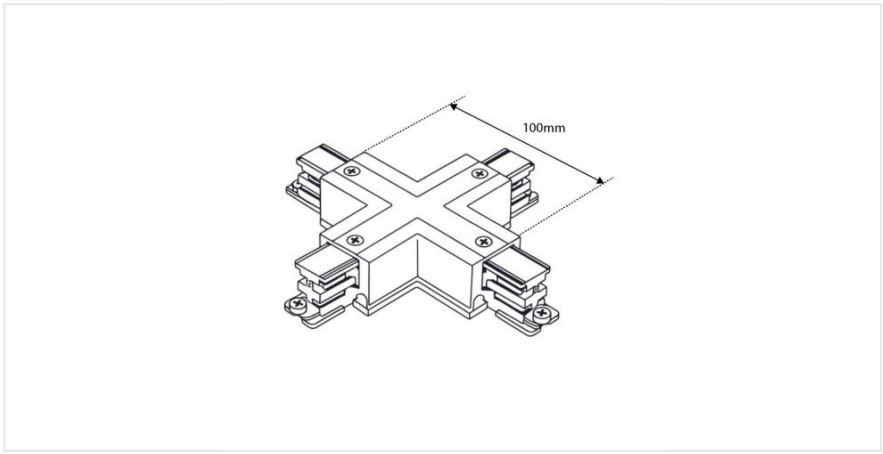
100mm